RadioLINK Alarm Base

Ei Electronics®
fire + gas detection

BROOKS
fire • evacuation • warning systems

Model: EIB168RC

Instructions

Read and retain carefully for as long as the product is being used. It contains vital information on the operation and installation. This booklet should be regarded as part of the product.

If you are just installing the Alarm, this booklet must be given to the householder. This booklet is to be given to any subsequent user.

Contents

	Page
1. Overview	3
2. Quick install guide	6
3. Installation	8
4. Troubleshooting the RF link	17
5. Checking & maintaining the alarm system	19
6. Technical specification	22
7. Guarantee	23
8. Limitations of radio communications	23
9. Getting the RadioLINK Base serviced	25

1. Overview

This version of the EIB168RC retains all the functionality of previous generations but has some additional features. It can be easily distinguished from previous versions by the blue LED on the side which replaces the amber LED.

The primary function of the RadioLINK base is to interconnect all Alarms in the system, i.e. when one Alarm senses fire, the EIB168RC base attached to that Alarm will transmit an RF signal that will activate the sounders in all the other Alarms.

The EIB168RC also supports Remote Control (RC) functionality. If the system has been fitted with one or more Remote Controllers or switches (*See Works with table)* .

Remote Control Functions

Warning: We strongly recommend that a RadioLINK controller be fitted in systems with five or more RadioLINK alarms. This will avoid issues with controlling and silencing systems that have been activated by nuisance (unwanted) alarms

Function	Description
Remote Testing	All the Alarms can be tested from a centralised location
Remote Locating	This will silence all the Alarms in the system except the one sensing the fire
Remote Silencing	This will silence all the Alarms in the system

Works with

Model No. - Alarms	Comment
EIB140RC Series	RadioLINK interconnect and Remote Control (RC)
Model No. - RadioLINK Devices	
EIB450 Remote Controller	Remote Controller for RadioLINK enabled alarms
EIB408RF, EIB428RF, EIB413RF	Input and output relay modules
EIB407RF	Manual Call Point

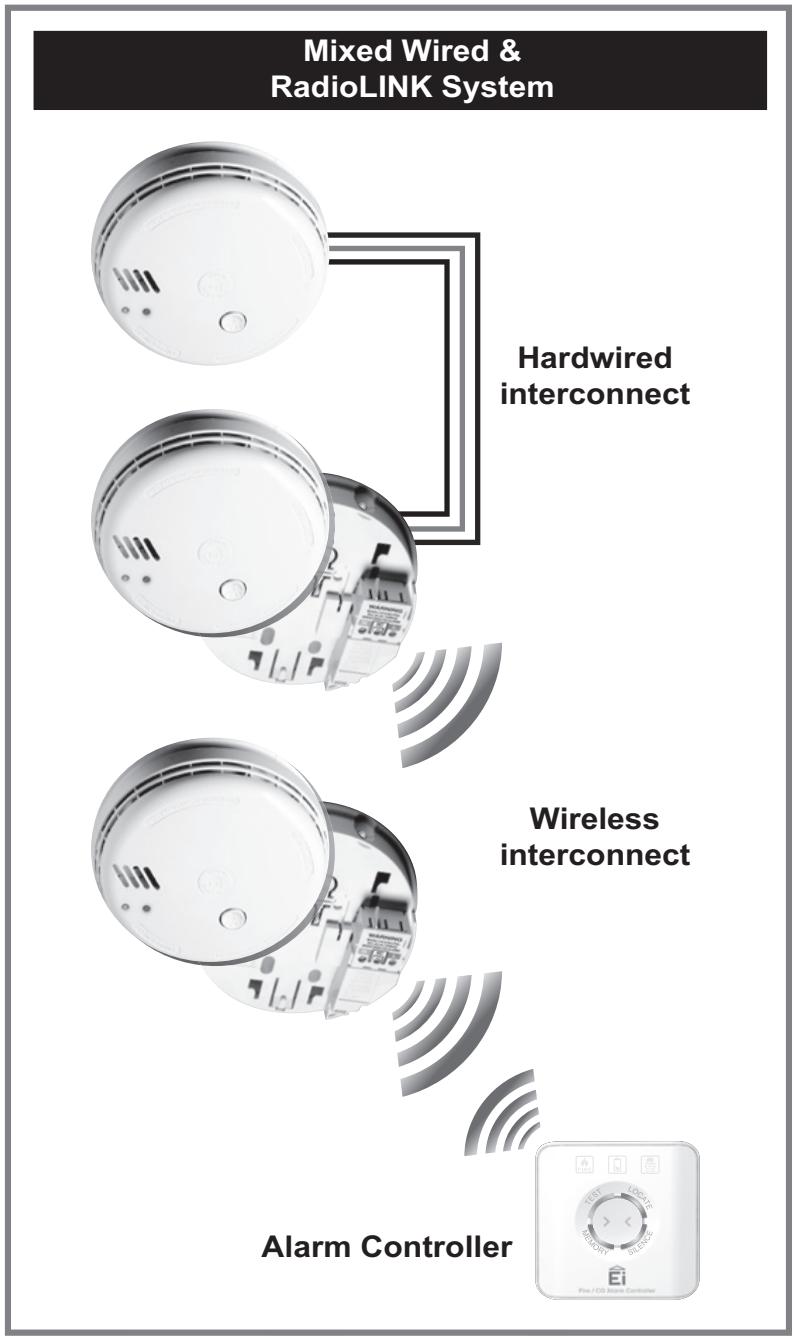

In this configuration the alarm controller must be a RadioLINK device.
It is not possible to control the system from the hardware interconnect side

2. Quick Install Guide

The EIB168RC RadioLINK Base must be installed by a licensed electrician.

The maximum number of RadioLINK Alarms in each system is 12. If your system has more than 12 Alarms please consult your supplier or contact tech support (see back page).

Install each RadioLINK Base in the centre of the ceiling at least 0.30m from light fittings as per the Smoke/Heat Alarm instructions and connect to nearest mains circuit.

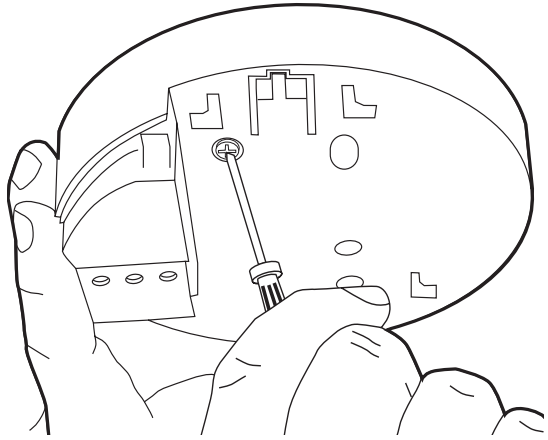

Slide Alarm on to the EIB168RC RadioLINK Base. This will automatically activate the rechargeable back-up cells in the base.

Repeat this procedure for all Alarms in the system.

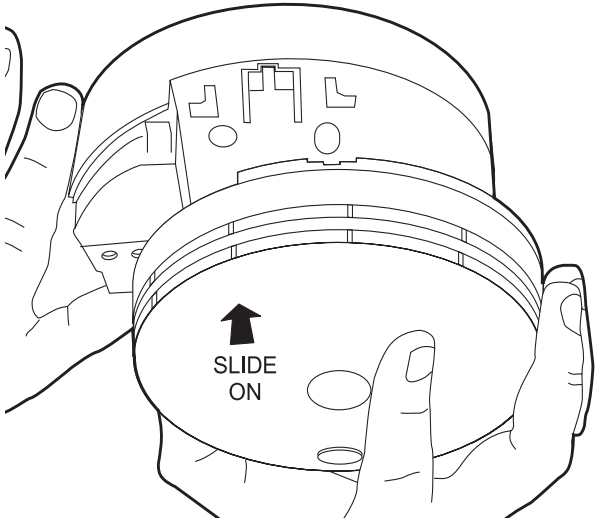

To House Code, insert a small screwdriver into the House Code switch slot and remove immediately when blue light comes on. Repeat this for all alarms in the system. This must be completed as quickly as possible to activate the House Code mode and ensure the system only communicates with itself and not neighbouring systems.

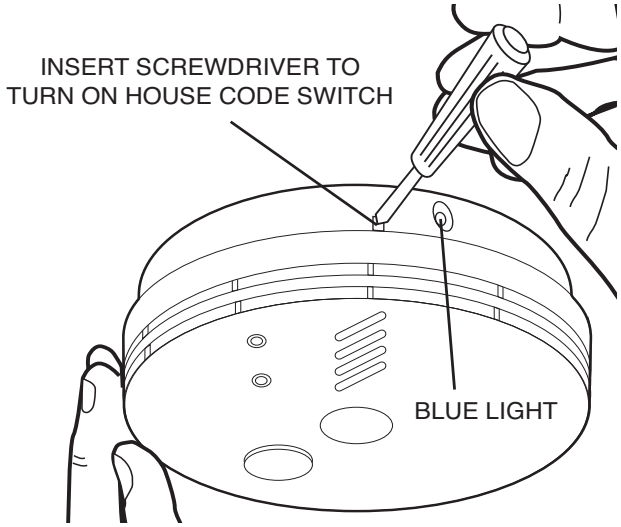

It is essential that the RadioLINK Bases are House Coded.

Press and hold the Button to test each Alarm. Check that the red light is flashing, the horn is sounding. To ensure the Alarm is communicating with others check that the blue light comes on for approx 3 seconds.

Before testing the next alarm allow a minimum of one minute after the last alarm has stopped sounding from the previous test.

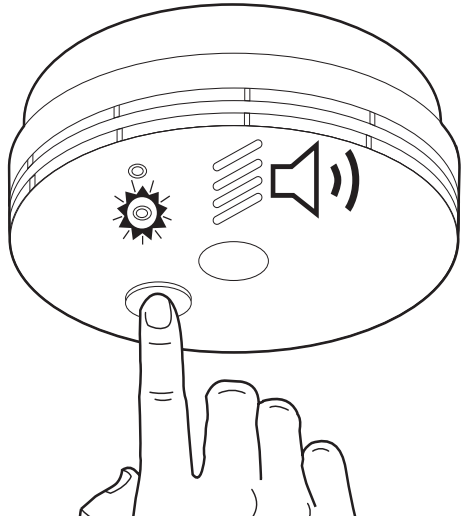

This guide is for quick referencing only. You must read the user manual thoroughly before installation and use.

3. Installation

WARNING

Mixing the Live and Neutral connections will damage the alarm. Ensure that the same colours are used throughout the premises for Live, Neutral and Interconnect wires (if used).

WARNING

Mains operated products should be installed by a **licensed electrician** as per the requirements of AS3000.

Failure to install this unit correctly may expose the user to shock or fire hazards.

This unit is not waterproof and must not be exposed to dripping or splashing liquids.

WARNING

Alternative Energy Sources (Wind, Solar, UPS, etc.).

This product is designed to be connected to a Pure or True Sine Wave 230 Vac supply. If connecting to a power source that utilises an inverter, e.g. PV solar panel or UPS, the Total Harmonic Distortion (THD) must be less than 5%. If in doubt check with manufacturer of the inverter.

Light Dimmer Circuits

This product **must not** be powered from a light dimmer circuit.

WARNING

The EIB168RC must **NOT** be connected when the house wiring insulation is being checked with high voltages. i.e. Do **NOT** use a high voltage insulation tester on the EIB168RC.

Orientation of RadioLINK bases

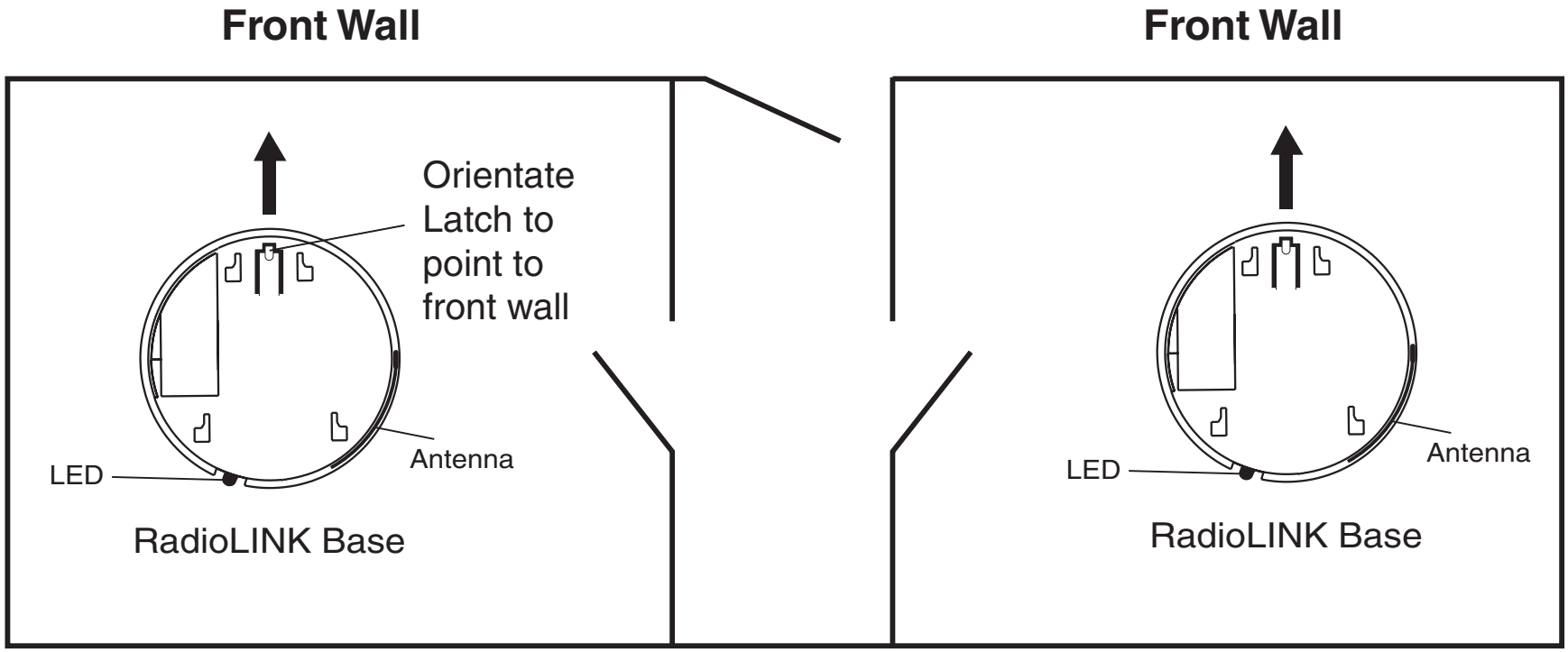

Orientate all RadioLINK bases in the same direction

It is best practice to align all the RadioLINK bases in the same direction as shown in the diagram above. This will ensure that all the antennas are in parallel which will maximise the RF signal strength.

Fixing & Wiring

Select a location complying with the advice in the Smoke/Heat Alarm instruction leaflet.
Disconnect the AC mains supply from the circuit that is going to be used.
Remove the cover from the terminal block as shown here.

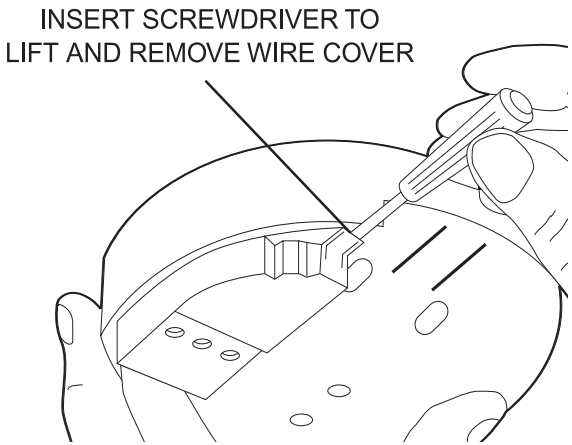

Bring the mains wires through the ceiling and thread them through the hole in the rear of the base.

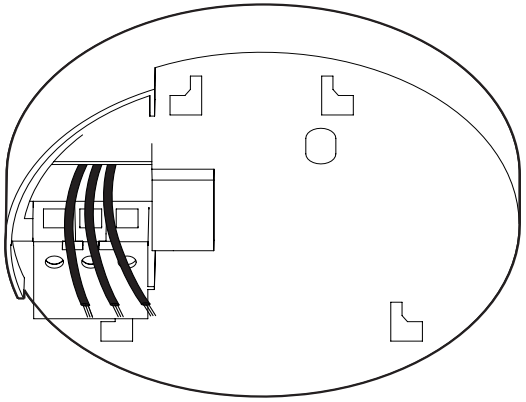

If the mains wires are being brought along the surface, break the knockout and trim to accommodate the conduit.

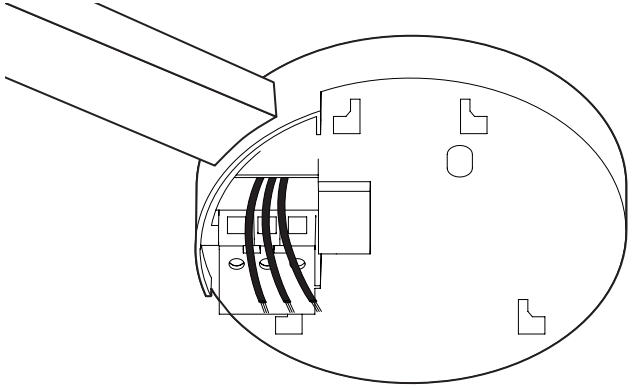

To prevent air draughts affecting smoke or heat entering the alarm it is important to seal the area around the hole in the ceiling with foam or silicon rubber.

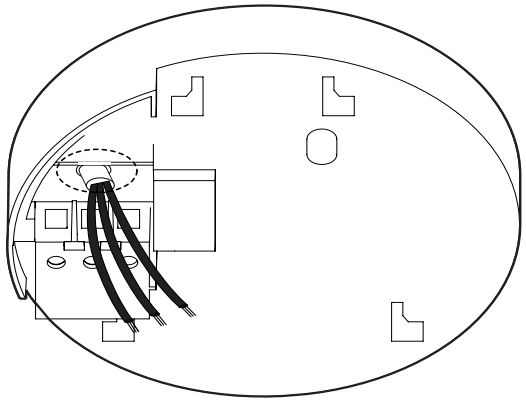

Screw the base to the ceiling using a single screw for now. The second screw should be inserted at the end of this procedure to secure the base permanently.

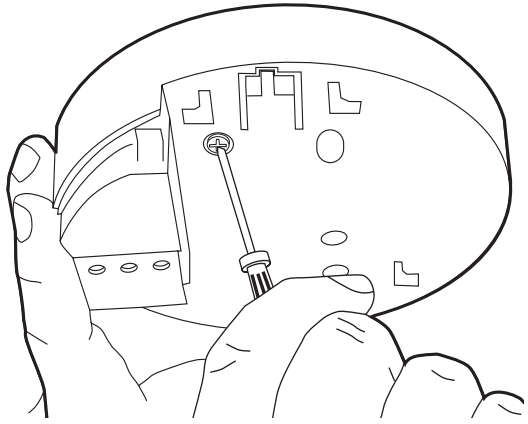

Connect the wiring to the terminal block as shown here.

L: Live - connect to the house wires coloured brown, or marked L.

N: Neutral - connect to the house wires coloured blue, or marked N.

IC: (Hardwire Interconnect- Only used to bridge a mixed wired and wireless system)

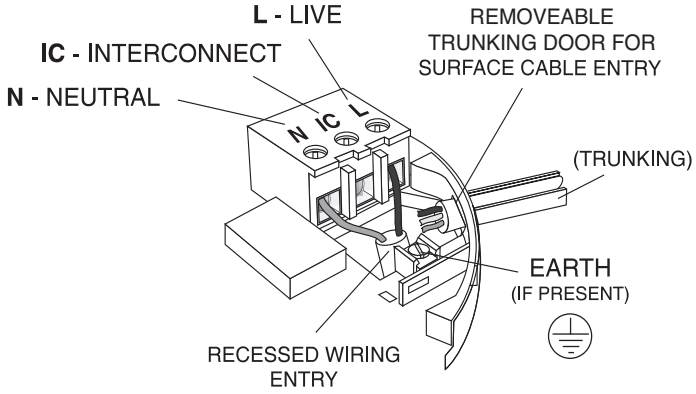

Insert second screw and tighten both screws on the base and replace the terminal cover.

Slide the Alarm head onto the base. Connect the mains power to the alarm circuit.

Wait 10 seconds and check that the green led on the Alarm cover is on indicating that mains power is present.

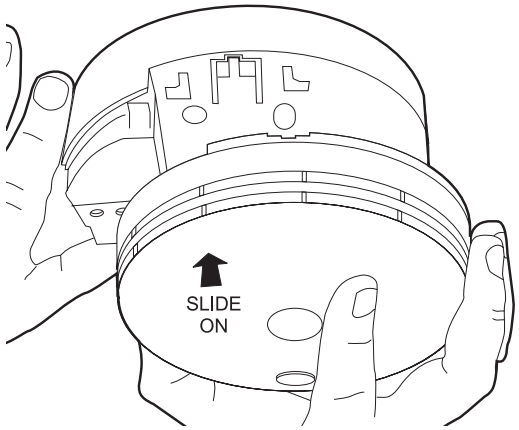

If the blue light flashes every 10 seconds, remove the alarm and manually depress the rechargeable cell "on" switch as shown and refit the alarm. If there is still a problem the cells may be depleted so leave the unit on mains power for 2 hours to charge and test again.

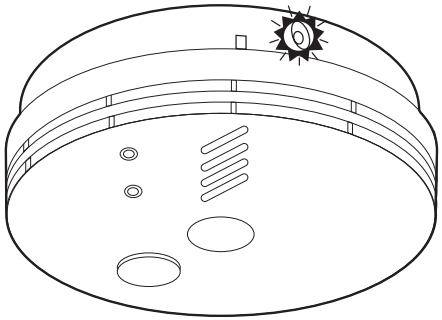

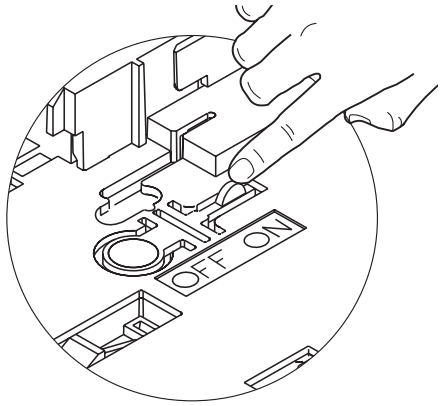

Press and hold the test button. The red led will flash and the horn will sound.

Repeat this installation procedure for all RadioLINK bases in the system.

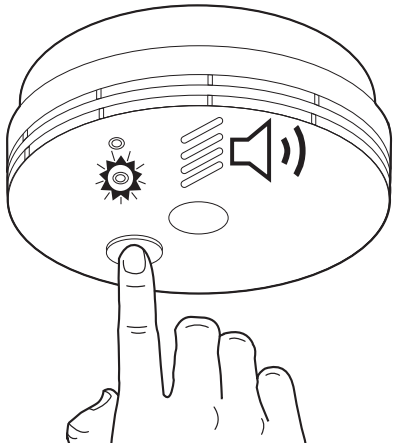

A maximum of 12 RadioLink bases may be used in any one system. If your system has more than 12 Alarms please consult your supplier or contact tech support (see back page).

House Coding

When all the RadioLINK bases have been installed and fitted with Alarms, you are now ready to house code the system.

It is essential to House Code the RadioLINK Bases to ensure they will not accidently communicate with nearby systems. Failure to house code the system may also result in a system malfunction.

WARNING

Press and hold the House Code switch on the side of any one of the RadioLINK Bases with a small screwdriver until the blue light illuminates. Immediately release the switch and the blue light will flash quickly and then stop. The flashing will repeat every 5 to 10 seconds thereafter.

Repeat this procedure for all Alarms in the system.

Any additional RadioLINK devices being used in the system, e.g. EIB450 remote controller must also be included in the house coding. For house coding instructions of RadioLINK devices consult their manuals.

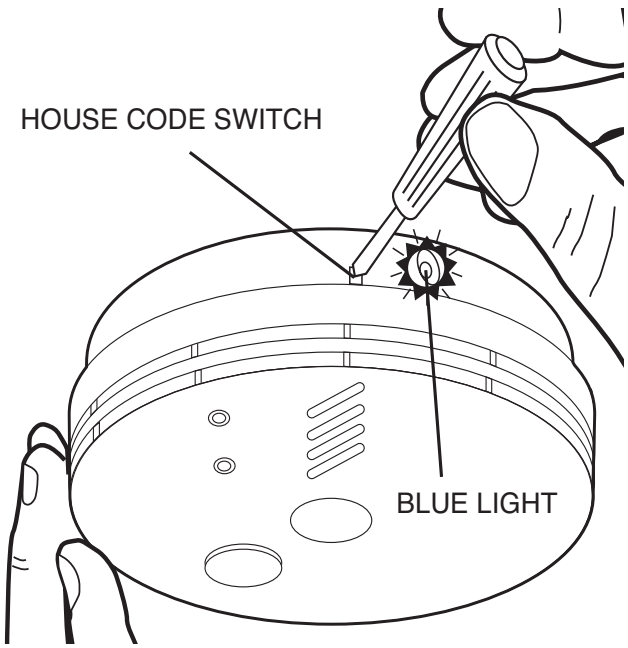

Check that all the devices have been successfully house coded.

This can be done by counting the amount of blue flashes on each RadioLINK base. The number of flashes should correspond to the number of devices in the system. e.g. if the system has 4 Alarms and a remote controller (e.g. EIB450) the blue light on each base will flash 5 times and repeat this pattern every 5 to 10 seconds.

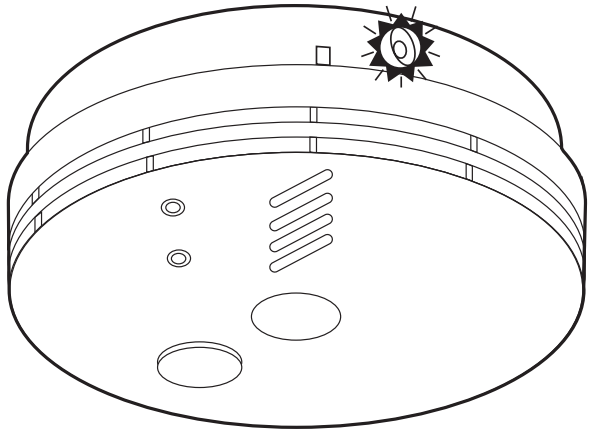

To complete the commissioning, the system must exit house code mode.

The units will automatically exit house code after 30 minutes. Once the house coding is completed the system will not communicate with any other RadioLINK devices.

The house code procedure can also be terminated on demand. To do this, press the house code button on one of the bases. When the blue light comes on solid release the button. This unit will then send a signal to all the other

RadioLINK devices instructing them to exit the house code mode.

Note: Some RadioLINK devices do not support the on demand exit house code feature. You may allow them to automatically exit house code after the time period or if you wish, you can do it manually. Consult the individual RadioLINK device manual for further instructions.

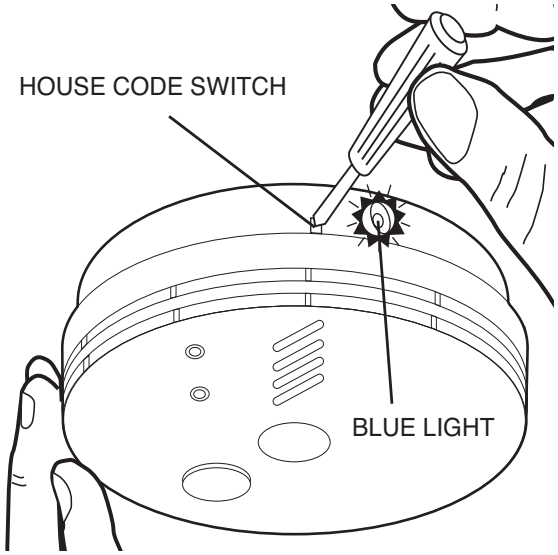

Check the communication by pressing the test/hush button for up to 20 seconds on each unit in turn. The red light will flash, the Alarm will sound and blue light on the RadioLINK Base sidewall will illuminate continuously for around 3.5 seconds. All other Alarms should sound (this may take up to 20 seconds).

Before testing the next alarm allow a minimum of one minute after the last alarm has stopped sounding from the previous test.

If all the units are not communicating consult the "Troubleshooting the RF link" section for information on how to resolve the problem.

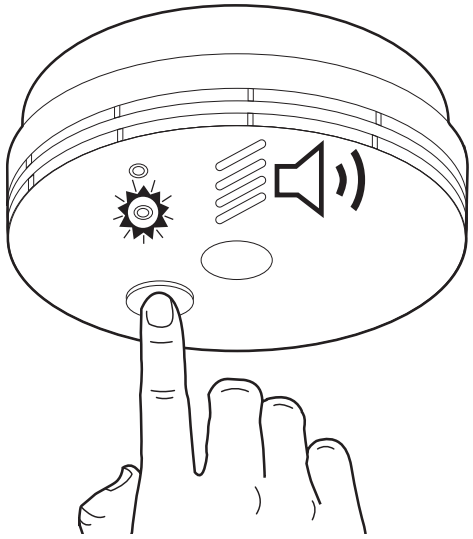

Factory reset the house code

Sometimes in order to resolve an RF communication issue, it may be necessary to reset (factory reset) and house code the system again.

To reset each RadioLINK base insert and hold a screwdriver into the house code slot on the base as shown here. The blue light will come on solid. Hold the screwdriver in position until the blue light starts to flash (6 seconds approx.) and then release the screwdriver. When all devices have been factory reset you can then start a new house code procedure. To factory reset other RadioLINK devices consult their manuals.

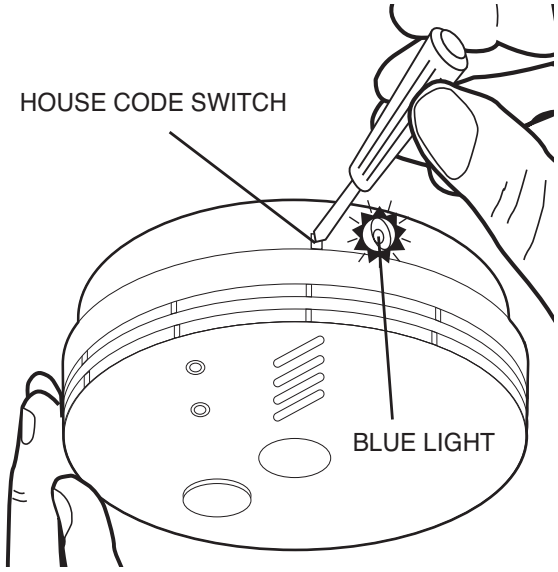

CAUTION: This is not the same procedure as entering and exiting house code.

4. Troubleshooting the RF link

If when checking the RadioLINK interconnection some of the alarms do not respond to the button test, then:

(i) Ensure you have held the test button down for up to 20 seconds and the blue light has come on continuously for 3.5 seconds. Before testing the next alarm allow a minimum of one minute after the last alarm has stopped sounding from the previous test.

(ii) Ensure all bases are orientated the same way with respect to the front wall of the dwelling (to have the antennas parallel - see below).

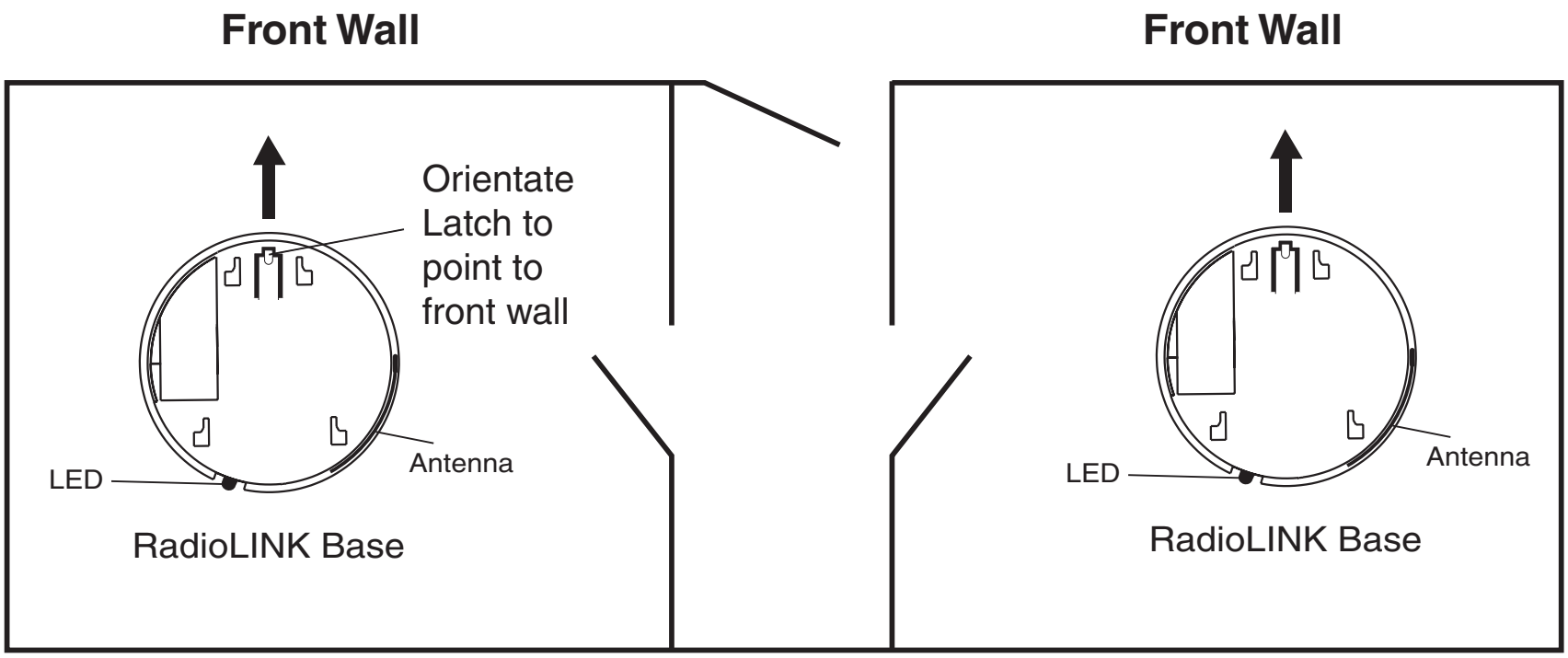

Orientate all RadioLINK bases in the same direction

(iii) Extend the flexible antenna from the base housing. To do this, the antenna should first be removed from its groove in the base of the unit. Remove the breakaway section in the outer rim and push the antenna in to this groove. For improved signal strength the antenna can be pushed flat or vertical with respect to the ceiling.

(iv) Re-locate/rotate the units. There are a number of reasons why the radio signals may not reach all the smoke alarms in your system (see Section on "Limitations of Radio Communications"). Try rotating the units or re-locating the units (e.g. move them away from metal surfaces or wiring) as this can significantly improve signal reception.

Rotating and/or relocating the units may move them out of the range of existing units even though they may have already been House Coded correctly in the system. It is important therefore to check that all detectors are communicating in their final installed positions. If units are rotated and/or resited, we recommend that all units are returned to the factory settings (press and hold the House Code switch on for around 6 seconds until the blue light comes on solidly and then flashes rapidly and stops. Release the House Code switch). Then House Code all units again in their final positions as per Section "Installation". The RadioLINK interconnection should then be checked by counting the number of flashes and button testing all units.

Note: The RadioLINK Base will only transmit and repeat alarm RF messages as long as the Smoke Alarm is detecting fire.

5. Checking & Maintaining the Alarm System

Switching off Mains for long periods

If the premises are regularly being left without mains power for long periods the Smoke/ Heat Alarms should be removed from the EIB168RC Bases. In addition to this the rechargeable backup batteries in the EIB168RC must also be switched off in order for them not to become depleted - see page 25. (This is sometimes done with holiday homes which are only occupied in the Summer).

The Alarms must be re-attached to the mounting plates when the premises are re-occupied. (Long term storage (over 1 year) can damage the batteries such that they will not recharge when the units are re-connected to the mains supply).

Check that the green light is on continuously to indicate that mains power is present and that the red light flashes every 40 seconds.

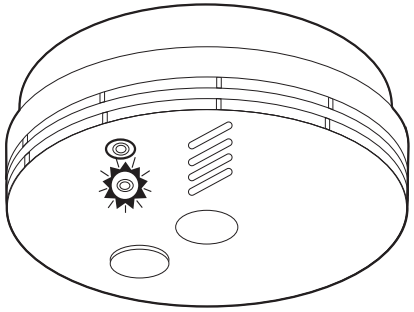

Frequent testing of the system is a requirement to ensure its continued and safe operation. Guidelines and best practices for testing are as follows:

1. After the system is installed
2. Once weekly thereafter
3. After prolonged absence from the dwelling (e.g. after holiday period)

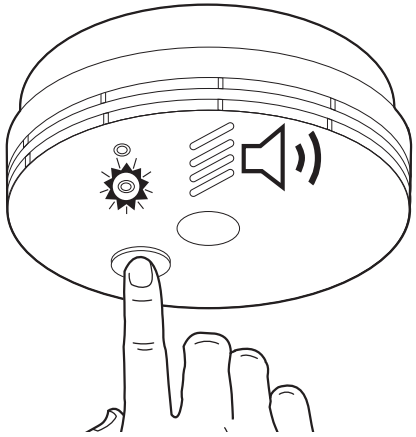

4. After repair or servicing of any of the systems elements or household electrical works.

To test an individual Alarm press and hold the test button until he horn sounds and the red light flashes. This will ensure that the sensor, electronics and sounder are working.

To test the RadioLINK system, press and hold the test button on one of the Alarms. The blue light on the side of the EIB168RC base will come on solid for around 3.5 seconds. Continue to hold the test button until all the Alarms in the system are sounding. This will take between 20 to 45 seconds depending on the number of Alarms in the system, e.g. a system with 12 Alarms will need a 45 second test. Release the test button when the test is completed. The local Alarm will stop sounding but you will hear the other Alarms sounding in the distance and then die out.

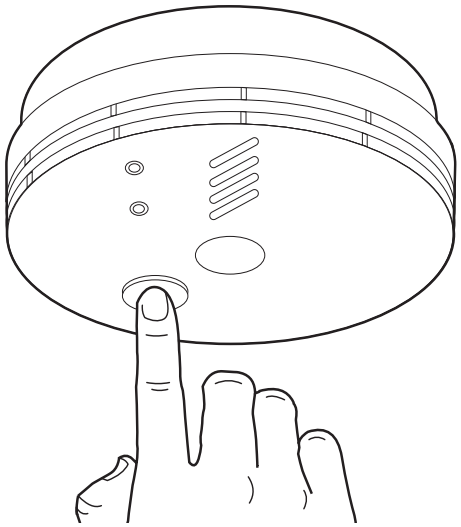

DO NOT TEST WITH FLAME (this can set fire to the Alarm and damage the house).
We do not recommend testing with smoke or heat as the results can be misleading unless special apparatus is used.

Battery Back-up Check

It is important to check that the rechargeable back-up cells in the EIB168RC RadioLINK Base are switched on, charged, and capable of powering the system. We therefore recommend that the functioning of the mains rechargeable cell back-up is checked directly **after installation** and then **at least yearly** N.B If the blue light is flashing refer to page 12.

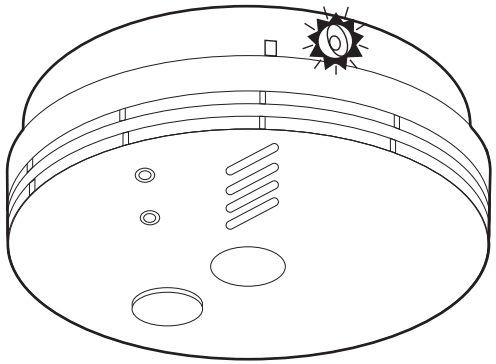

End of Life (EOL) Check

Check the replace unit by date on all EIB168RC bases and attached Alarms. If the date has been exceeded then the device should be replaced.

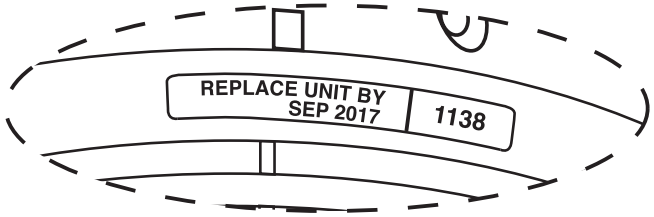

Housekeeping

Wipe the Alarm with a damp cloth. Do not use any detergents or house cleaning products.

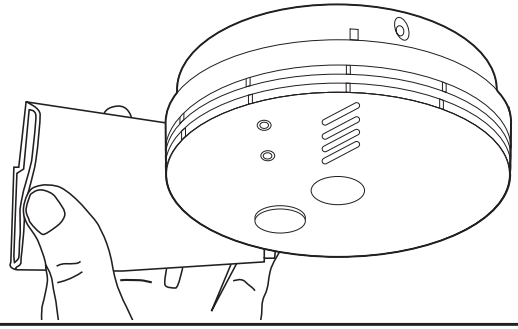

Vacuum all around the smoke entry openings in the smoke Alarms to remove any excess dust, lint, cobwebs, etc.

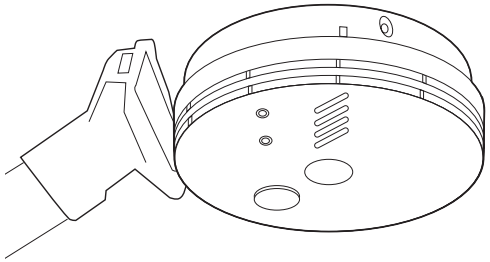

6. Technical Specification

Supply Voltage	230VAC ~50Hz, 80mA
Battery Back-up	Rechargeable Lithium
RF Frequency	926Mhz
Temp Range	0°C to 40°C (Cat 3)
Humidity	15% - 95% (Non Condensing)
Receiver Category	Cat 2
EMC Performance	EN 301-489
ACMA Compliance	AS/NZS4268:2011
RF Power	+5dBm (min)
Range	>100 meters in free space
Multi-Repeater	Range is extended by rebroadcasting
Multi-Path	Improves system reliability
Number of RF interconnected Alarms	12 per house code group*

*Note: For applications with greater than 12 Alarms please contact technical support for guidance.

7. Guarantee

Brooks guarantees the Model EIB168RC for 5 years from date of purchase against any defects that are due to faulty materials or workmanship.

This guarantee only applies to normal conditions of use and service and does not include damage resulting from accident, neglect, misuse, unauthorised dismantling, or contamination howsoever caused. This guarantee excludes incidental and consequential damage.

This guarantee does not cover costs associated with the removal and/or installation of units.

If the product should become defective within the guarantee period, it may be returned with proof of purchase, carefully packaged, and with the problem clearly stated to the place of purchase or phone this number for advice.

Tel: 029684 1466

We shall at our discretion repair or replace the faulty unit.

8. Limitations of Radio Communications

Brooks radio communication systems are very reliable and are tested to high standards. However, due to their low transmitting power and limited range (required by regulatory bodies) there are some limitations to be considered:

(i) Radio equipment, such as the EIB168RC RadioLINK Base, should be tested regularly

- at least weekly. This is to determine whether there are sources of interference preventing communication. The radio paths may be disrupted by moving furniture or renovations, and so regular testing will help identify these and other faults, so that they can be rectified (see Section 5).

(ii) Receivers may be blocked by radio signals occurring on or near their operating frequencies, regardless of the House Coding. The EIB168RC RadioLINK Base is in compliance with AS/NZS4268:2012, and has been proven to provide reasonable protection against harmful interference in residential installations. This equipment generates, uses and can radiate radio frequency energy and, if not installed and used in accordance with the instructions, may cause interference to radio and/or television reception.

However, there is no guarantee that interference will not occur in a particular installation. If this device does cause such interference, which can be verified by turning the RadioLINK device on and off (remove both the mains and turn off backup power supplies), the user is encouraged to eliminate the interference by one or more of the following measures:

(i) Re-orientate or re-locate the unit.

(ii) Increase the distance between the EIB168RC and the device being affected.

(iii) Connect the device being affected to a mains outlet on a circuit different from the one that supplies the EIB168RC.

(iv) Consult the supplier or an experienced radio/television technician.

9. Getting the RadioLINK Base Serviced

If your RadioLINK Base fails to work after you have carefully read all the instructions and checked that the unit has been installed correctly contact Technical Support at the nearest address given at the end of this leaflet.

If it needs to be returned for repair or replacement, lightly press the “off” switch to disconnect the rechargeable cells and put both the Alarm and the EIB168RC RadioLINK Base in a padded box and send it to “Customer Assistance and Information" at the nearest address given on the unit or in this leaflet.

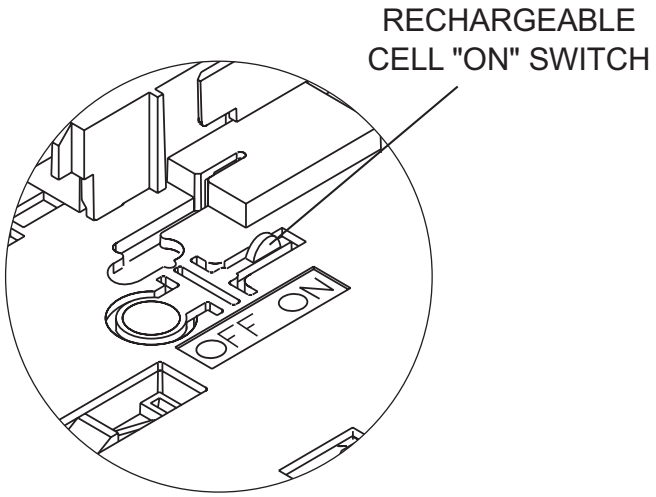

State the nature of the fault, where the RadioLINK Base and Alarm were purchased and the date of purchase. Do not snap the Smoke/Heat Alarm on to the RadioLINK Base as this connects the battery and the unit may beep or Alarm in the post.